HI SHARP
ELECTRONICS CO., LTD.
SECURITY INTELLIGENCE

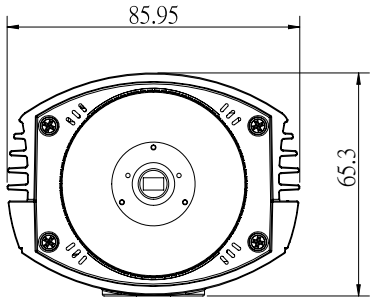


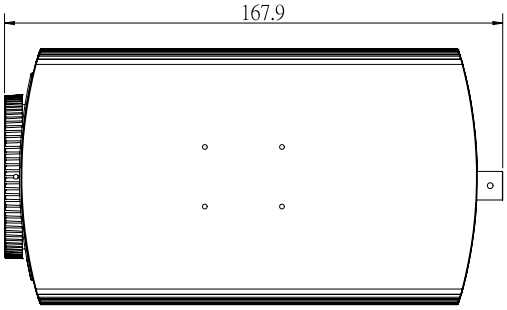


# IP CAMERA
# HS-X022KA

- H.265 / H.264
- 2MP ( 1920 × 1080 ) @30fps
- 2/3 DNR, WDR, AWB, AE, HLC, BLC, Digital Defog
- ICR auto switch, true day / night
- Support three streams
- Support JetPack SDK / DeepStream SDK

RoHS CE FC

Address: No.673, Changxing Rd., Bade Dist., Taoyuan City, Taiwan
Website: www.hisharp.com | E-Mail：sales@hisharp.com.tw
Tel: +886-3-3653121 | Fax: +886-3-3681482

# 2MP IP BOX CAMERA

| Camera | |
|---|---|
| Image Sensor | 1/2.8" Progressive CMOS |
| Image Size | 1920 × 1080 |
| Electronic Shutter | 1 / 4 s ~ 1 / 50,000 s |
| Min. Illumination | 0.002 lux @F1.2, AGC ON ; 0 lux with IR |
| Lens | CS Mount |
| Day & Night | ICR auto switch |
| WDR | YES |
| AWB | YES |
| AE | YES |
| HLC | YES |
| BLC | YES |
| Digital Defog | YES |
| Digital DNR | 2 / 3 DNR |
| **Image** | |
| Video Compression | H.265 / H.264 |
| H.264 Compression Standard | Baseline Profile / Main Profile / High Profile |
| Resolution | 1080P ( 1920 × 1080 ), 720P ( 1280 × 720 ), D1, CIF |
| Main Stream (S1) | 1080P @30fps |
| Sub Stream (S2) | 720P @30fps |
| Third Stream (S3) | D1 / CIF @30fps |
| Bit Rate | 128 Kbps ~ 8 Mbps |
| Bit Rate Type | VBR / CBR |
| Image Settings | Saturation, Brightness, Contrast, Wide Dynamic, Sharpen, NR, AWB etc. |
| ROI | - |
| **Interfaces** | |
| Network | RJ45 |
| RS485 | YES |
| Video Output | CVBS output (BNC × 1) , HD output × 1 |
| USB | YES |
| Audio line in | 1CH |
| Audio line out | 1CH |
| Alarm Input | 2CH |
| Alarm Output | 2CH |
| **Storage** | |
| eMMC | 16GB |
| Hardware Reset | Yes |

# HS-X022KA

| Functions | |
|---|---|
| JetPack SDK | NVIDIA L4T, TensorRT, cuDNN, CUDA<br>Multimedia API, Computer Vision |
| DeepStream SDK | • H.264 and H.265 video decoding<br>• Object tracking<br>• On-screen display API<br>• Region of Interest (ROI)<br>• JPEG decoding<br>• Scaling, format conversion, rotation<br>• 360-Degree dewarping<br>• Metadata generation and encoding |
| PoE | Yes, IEEE 802.3AT |
| **Others** | |
| Power Supply | AC24V / DC12V / PoE |
| Power Consumption | < 24W |
| Operating Environment | - 10 ° C ~ 50 ° C (-14° F ~ 122° F)<br>Humidity: less than 85 % (non-condensing) |
| Dimensions | 167.9 × 85.9 × 65.3 mm |
| Weight | Approx. 708g |
| Installation | Ceiling mounting; Wall mounting |

## Accessories

X022KA+B645

B645

**Rear Panel**

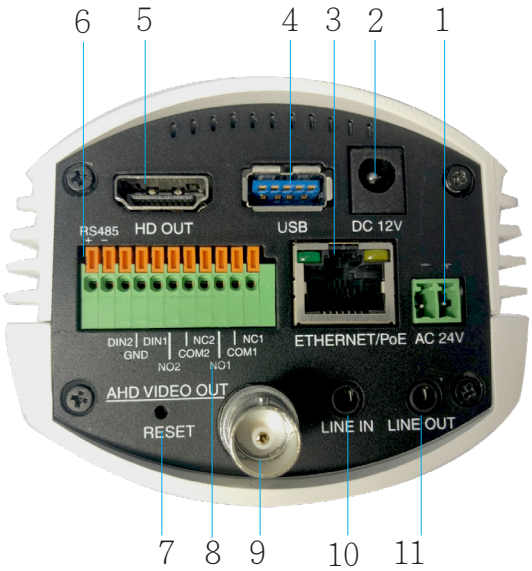


| | |
|---|---|
| 1. Power port (AC24V) | 8. Alarm input / output |
| 2. Power port (DC12V) | 9. AHD video output |
| 3. Ethernet connector (PoE) | 10. Audio input |
| 4. USB port | 11. Audio output |
| 5. HD OUT | |
| 6. RS 485; connectors for PTZ | |
| 7. Restore factory default setting | |